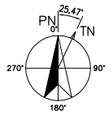

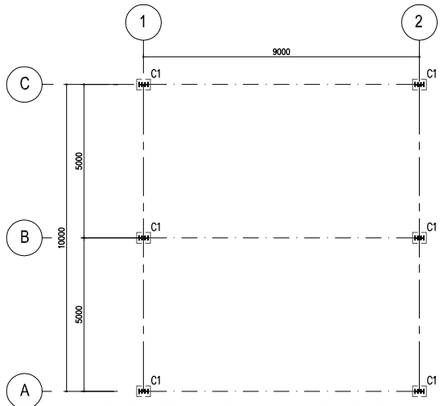

BASE PLATE PLAN EL.+1.500 (B.O.BASE PL)

SCALE 1 : 100

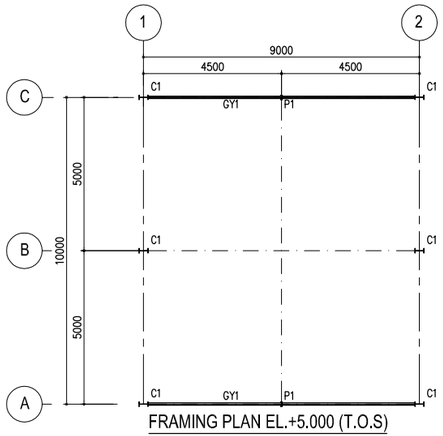

FRAMING PLAN EL.+5.000 (T.O.S)

SCALE 1 : 100

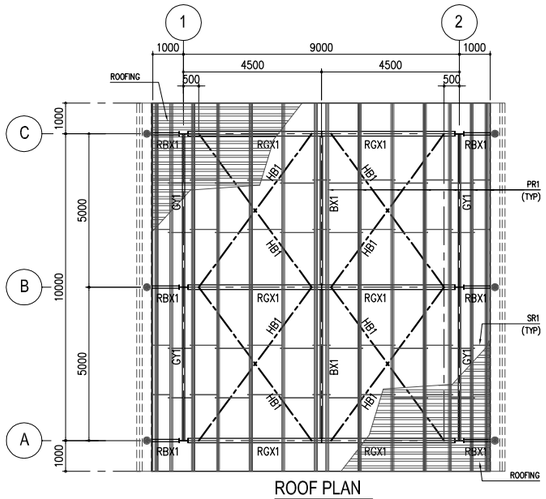

ROOF PLAN

SCALE 1 : 100

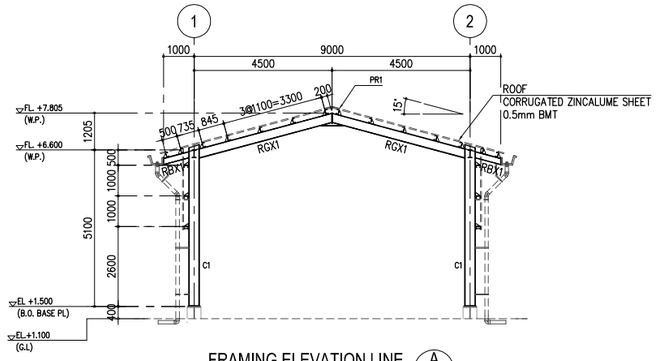

FRAMING ELEVATION LINE A

SCALE 1 : 100

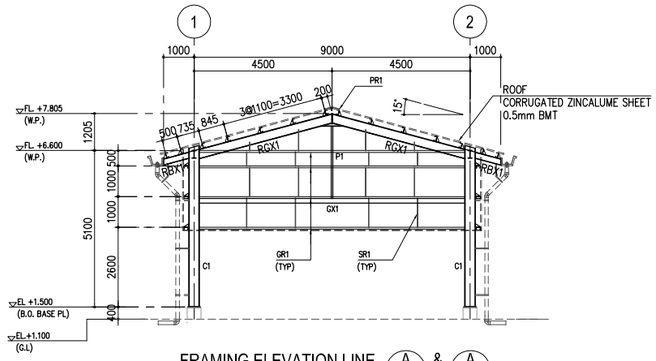

FRAMING ELEVATION LINE A & A

SCALE 1 : 100

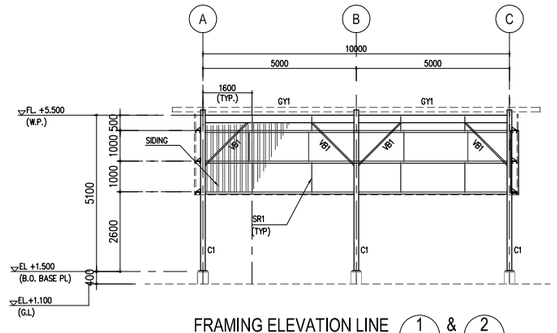

FRAMING ELEVATION LINE 1 & 2

SCALE 1 : 100

KEY PLAN

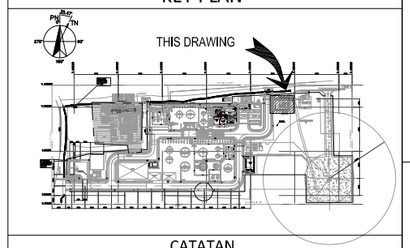

CATATAN

NOTE :

1. ALL DIMENSIONS ARE IN MILIMETERS, ELEVATION AND COORDINATE ARE IN METERS UNLESS OTHERWISE NOTED.
2. REFERENCE OF ELEVATION AND COORDINATE
   GL ± 0.000 = MSL +33.75 = +1.100
3. MATERIAL SPECIFICATION :
   a. STEEL STRUCTURE : ASTM A36 OR JS 63101 SS400
      OR SNI 03–1729–2002 OR EQUIPMENT
      FY = 2400 KG/CM2
   a. BOLT
      – FOR STRUCTURAL (HIGH STRENGTH BOLT) : ASTM A325
        OR JIS B1180 OR EQUIVALENT
      – FOR NON STRUCTURAL (ORDINARY STRENGTH BOLT) : ASTM A307
        OR JIS B1180 OR EQUIVALENT
4. WELDING ELECTRODES : AWS–AS.I E70 SERIES OR JIS 23212
   D50 SERIES OR EQUIVALENT

MEMBERS SCHEDULE

MEMBER	MARK	PROFILE	REMARK
COLUMN	C1	H–300x150x6.5x9	
POST	P1	C–100x50x5x7.5	
GIRDER	GX1	H–150x150x7x10	
	GY1	H–150x75x5x7	
BEAM	BY1	H–150x75x5x7	
RAFTER	RGX1	H–300x150x6.5x9	
	RBX1	H–150x75x5x7	
BRACING	HB1	RB ø16 W/ TURN BUCKLE	
	VB1	L–50x50x5	
PURLIN	PR1	C–150x65x20x3.2	
	GR1	L–100x100x10	
SAG ROD	SR1	RB ø12	

NOTES :

1. BEFORE STARTING CONSTRUCTION, CONTRACTOR SHALL VERIFY ACTUAL FIELD CONDITION AND DETERMINE LOCATION, ELEVATION OF EXISTING GRADING AND OTHER STRUCTURE. THE CONTRACTOR SHALL TAKE NECESSARY MEASURES TO HOLD SAFE AND PREVENT DAMAGE TO ANY EXISTING FACILITIES.

DRAWING REFERENCE	DESCRIPTION	REV	DATE	DESCRIPTION	PREPR'D	CHECK'D	APRV'D
TMBP–SP001–CS–ARC–106	ARCHITECTURE FLOOR PLAN, ROOF PLAN, AND ELEVATION OF INSTRUMENT AIR PACKAGE						
TMBP–SP001–CS–BLD–106	FOUNDATION PLAN, DETAIL AND SECTION OF INSTRUMENT AIR PACKAGE						
TMBP–SP001–PI–PLP–101	OVERALL PLOT PLAN DRAWING	A	07/01/2026	ISSUED FOR REVIEW	NAS	AS	RTN

PT. PERTAMINA EP APPROVAL

CHECKED | APPROVED

PROCET :

JASA PEMBANGUNAN FASILITAS PRODUKSI STASIUN PENGUMPUL (SP) TANJUNG MIRING BARAT & KARANGAN TIMUR

OWNER : skkmigas PERTAMINA EP

CONTRACTOR : POG

SCALE : 1 : 100

DRAWING NO. TMBP-SP001-CS-FRM-106

SHEET. NO. 1 OF 1

REV A

DRAWING TITLE :

FRAMING PLAN, ROOF PLAN , ELEVATION, SECTION & DETAIL OF INSTRUMENT AIR PACKAGE SHELTER